RB 5 _ _ 121 G

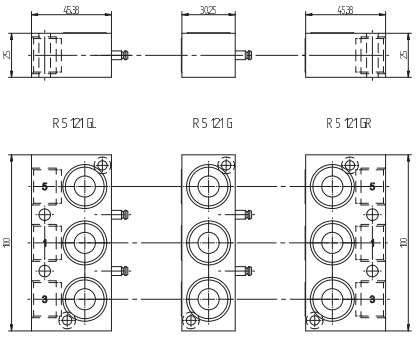

Parts of modular manifold RB 5 _ _ 121 G

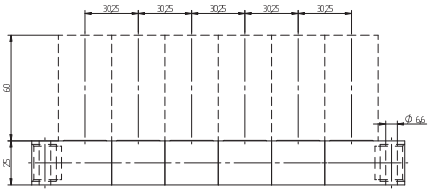

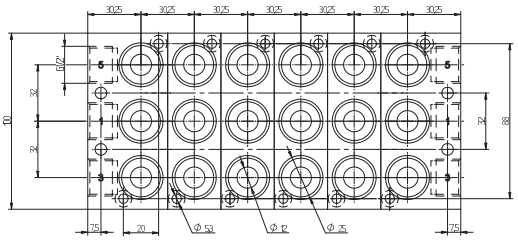

RB 5 _ _ 121 G Orifice size: 17 mm

The following valves can be assembled to the system **RB 5 _ _ 121 G:**

Solenoid valves:

5/2 single sol.	G 1/2“	MH 510 121 G	page 2.5.2.1.3
5/2 double sol.	G 1/2“	MH 520 121 G	page 2.5.2.1.6
5/3 solenoid	G 1/2“	MH 53_ 121 G	page 2.5.3.1.3

Pneumatically actuated valves :

5/2 single pilot	G 1/2“	P 510 121 G	page 2.4.2.3
5/2 double pilot	G 1/2“	P 520 121 G	page 2.4.2.5
5/3 pneumatic	G 1/2“	P 53_ 121 G	page 2.4.3.2

Further technical details on the valves can be found on the pages mentioned above. Drawings of the “G-version” valves with the additional mounting holes for manifold mounting can be found on this page.

Blanking plates are also available type BP 5 121 G.

The system consists of:

End-plate right	type R 5 121 GR
End-plate left	type R 5 121 GL
Individual position	type R 5 121 G

The plates can also be ordered assembled by the manufacturer.
In this case order RB 5 _ _ 121 G (G 1/2”).
Please add two digits for the number of positions required.

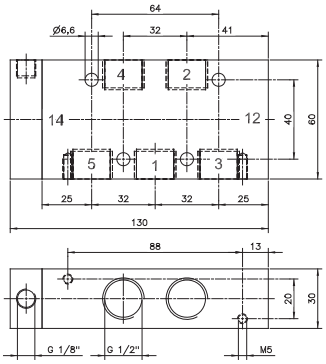

P 510 121G

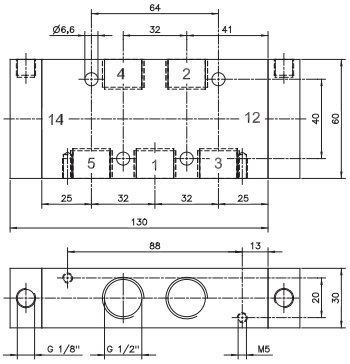

P 520 121 G/P 53_121 G

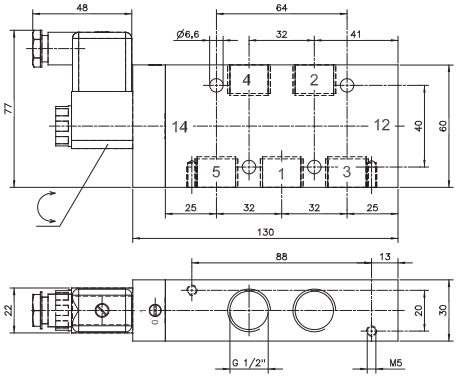

MH 510 121 G

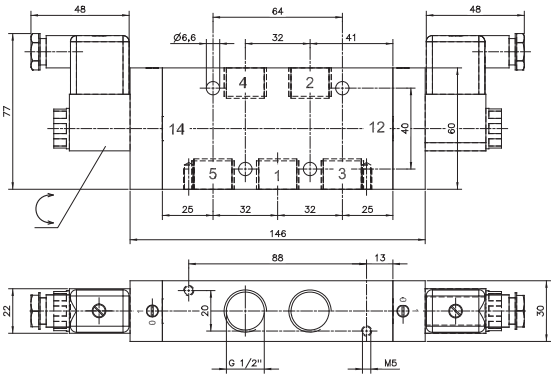

MH 520 121 G / MH 53_ 121 G

Type	Function	Weight
R 5 121 GR	End-plate right	0,24 kg
R 5 121 GL	End-plate left	0,24 kg
R 5 121	Individual position	0,15 kg